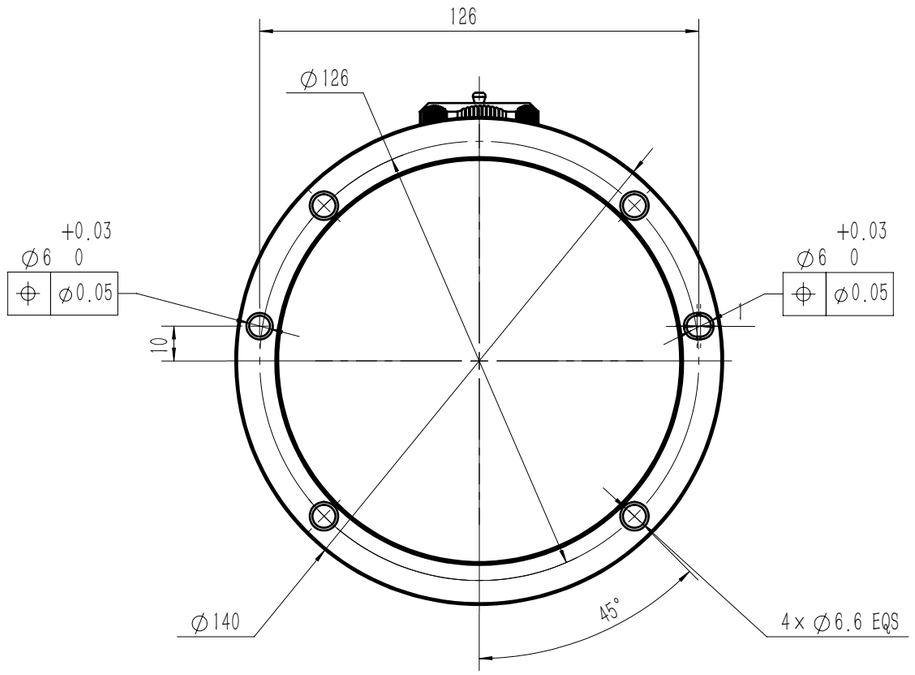
126
∅126
+0.03
∅6 0
⌖ ∅0.05
+0.03
∅6 0
⌖ ∅0.05
10
∅140
45°
4 x ∅6.6 EQS

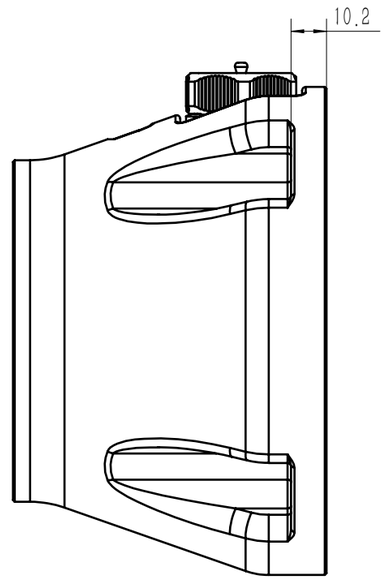
10.2